CRICKLEWOOD ELECTRONICS

NJD Dub Siren Clone



Please make sure all the components are present–see table below:

Designation	Description	Part#	Quantity
R1, R19, R22	100kΩ ¼W carbon resistor (Brown, Black, Yellow, Gold)	Q100K	3
R2, R3, R24	4.7kΩ ¼W carbon resistor (Yellow, Purple, Red, Gold)	Q4K7	3
R4, R5, R18, R21	220kΩ ¼W carbon resistor (Red, Red, Yellow, Gold)	Q220K	4
R6	2.2kΩ ¼W carbon resistor (Red, Red, Red, Gold)	Q2K2	1
R7, R13, R16	47kΩ ¼W carbon resistor (Yellow, Purple, Orange, Gold)	Q47K	3
R8, R11, R14	10kΩ ¼W carbon resistor (Brown, Black, Orange, Gold)	Q10K	3
R9, R10, R23	1kΩ ¼W carbon resistor (Brown, Black, Red, Gold)	Q1K0	3
R12, R15	22kΩ ¼W carbon resistor (Red, Red, Orange, Gold)	Q22K	2
R17, R20	470kΩ ¼W carbon resistor (Yellow, Purple, Yellow, Gold)	Q470K	2
C1	1µF ceramic capacitor	CZF1U0	1
C2, C3	10nF boxpoly capacitor	CPB10N	2
C4, C6	10µF 25V electrolytic capacitor	10H25	2
C5	100µF 25V electrolytic capacitor	100H25	1
C7	220µF 16V electrolytic capacitor	220H16	1
D1, D2, D3, D4	1N4148 signal diode	1N4148	4
D5	5mm red LED	R5D	1
Q1, Q2	BC548 NPN bipolar transistor	BC548B	2
Q3, Q4*	BC213L PNP bipolar transistor*	BC213L*	2
VOLUME	50kΩ linear 9mm potentiometer, vertical mounting	SVN50KD	1
9V BATTERY	PP3 9V battery snap	PP3H	1
OUTPUT JACK	6.3mm (1/4”) mono jack socket, chassis-mount	JCR	1
S1, S2, S3	3-pole, 4-throw rotary switch, PCB-mount	RTY3P	3
S4	DPDT miniature toggle switch	TM22N1	1
BUTTON1	Arcade-style push button, yellow	PBAY	1
BUTTON2	Arcade-style push button, green	PBAG	1
N/A	CKDUB PCB	CKDUBPCB	1
9V	2.1 x 5.5mm PCB-mount DC barrel jack socket	ROCT	1
N/A	Green knob	KG19G	1
N/A	Yellow knob	KG19Y	1
N/A	Green knob	KG19R	1
N/A	Volume control knob	KK19	1
N/A	Black wire	N/A	10cm
N/A	Yellow wire	N/A	20cm

*Polarity of Q3 & Q4 is reversed on the PCB. See instructions below

Tools Required:

Soldering iron, 15W or higher

Good quality electronics solder

Side cutters

Assembly Instructions

Check that all components are present.

Place and solder the components as marked on the board. For ease of assembly, mount and solder the smaller components first (e.g. resistors first, then capacitors, etc.).

Resistors

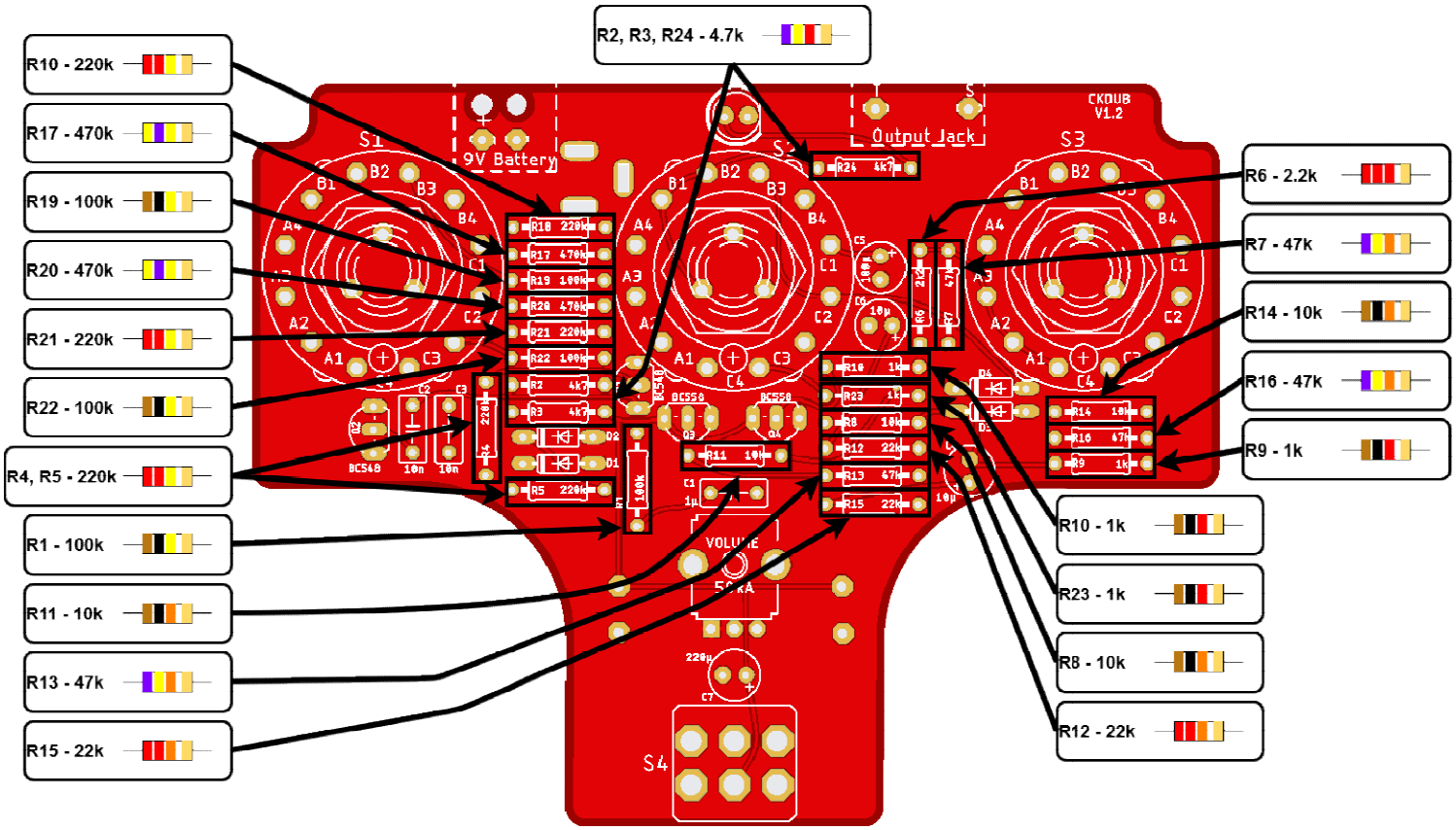

Insert and solder the resistors; they can be mounted in either direction. Make sure to match up the colour bands to the values printed on the board (see diagram above).

Capacitors and Diodes

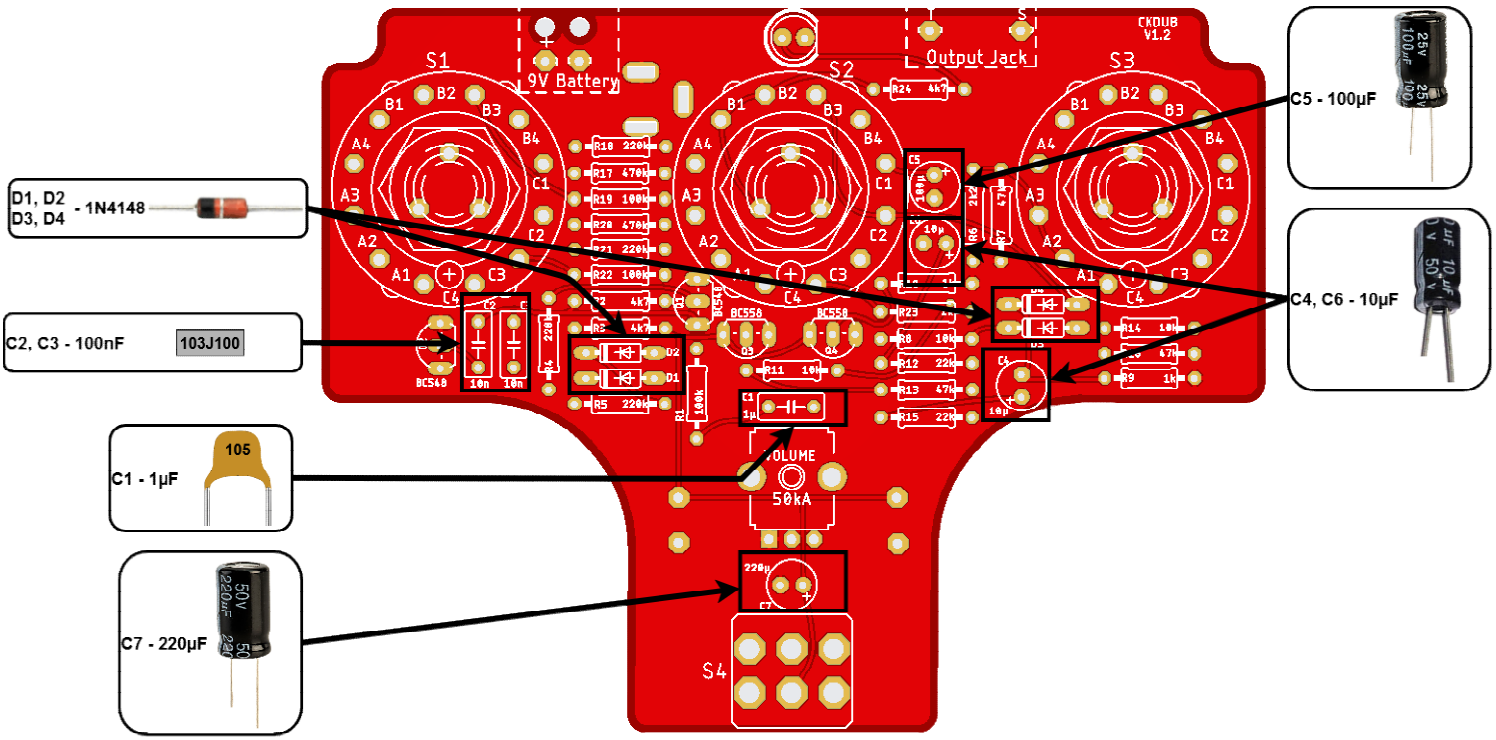

Note that the diodes and some of the capacitors (C4, C5, C6 and C7) are polarized and should therefore be mounted according to the markings on the board. Match up the band on the diodes to the band printed on the board. The electrolytic capacitors have a longer leg, which needs to be soldered to the pad marked with a “+”. Capacitors C1, C2 and C3 are non-polarized, so they can be mounted in either direction.

Transistors and LED

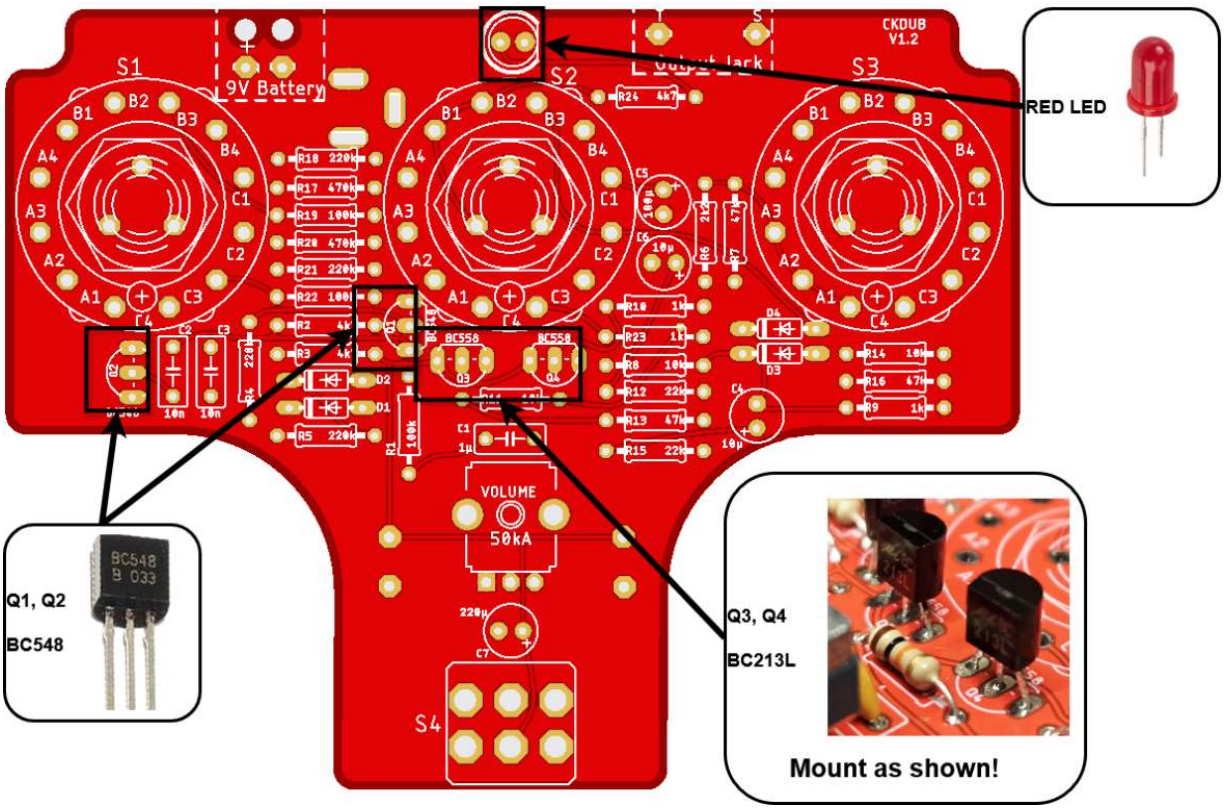

Match up transistors Q1 and Q2 to the footprint on the board and solder them in.

IMPORTANT: For transistors Q3 and Q4, use the provided BC213L transistors instead of BC558. These transistors have to be mounted in reverse, as shown in the illustration above (flat side of the transistors should face resistor R11).

The LED has a long leg (+) and a short leg (-); make sure to mount the short leg to the pad next to the flat side of the LED footprint on the board. Solder the LED so that the bottom of the LED is ~10mm away from the board.

Hardware - Top

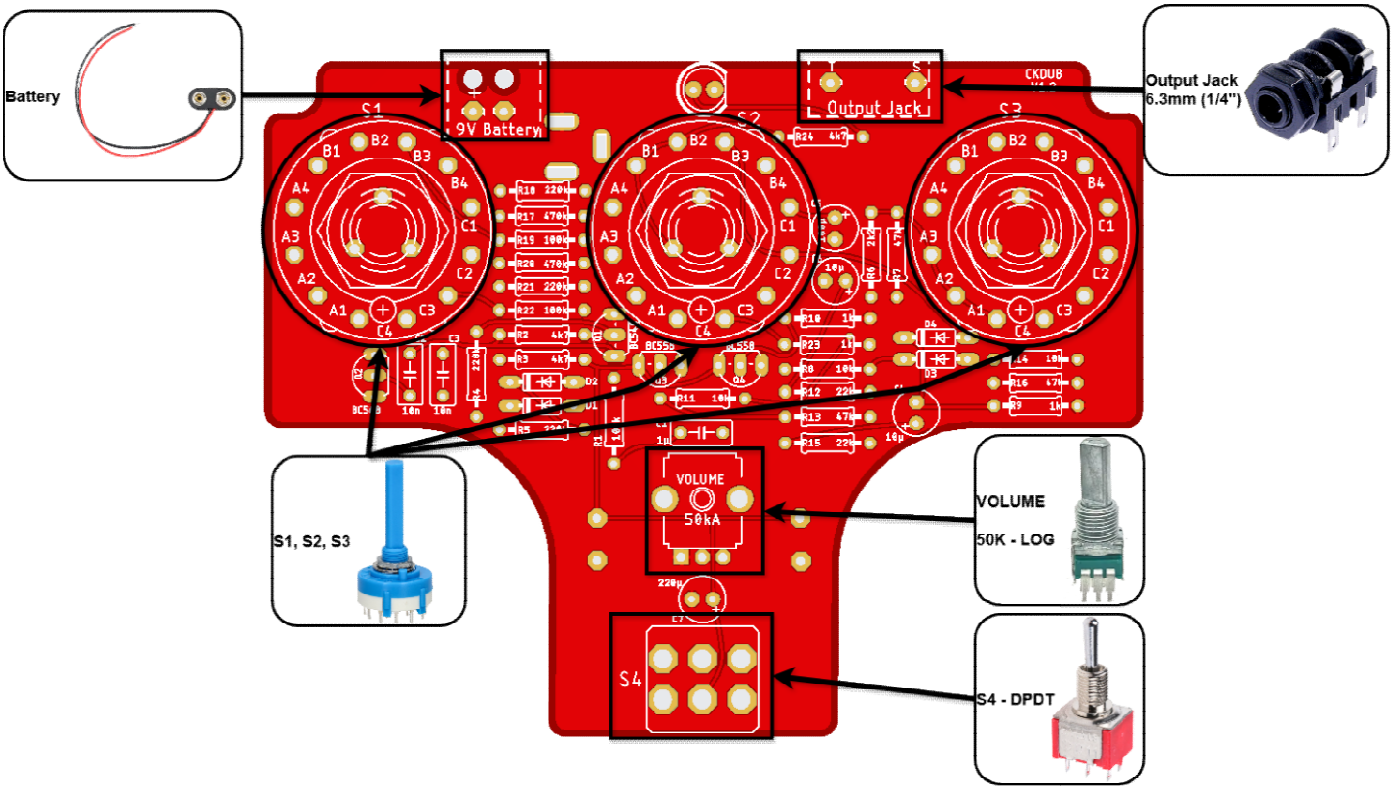



1 - Trim the rotary switch shafts so that they are ~17.5mm long
2 - Cut off the small plastic tab next to the shaft
3 - Remove the nut, washer and the stop ring. Place the tab of the stop ring in the hole marked “3” for the first switch (S1) and in the hole marked “4” for the other 2 switches (S2 & S3)

Note: If you are not planning on using the siren with a battery, do not solder the battery clip to the board, as it can short against the case when a battery is not connected to it.

The volume control, battery snap and switches S1, S2, S3 and S4 can be mounted and soldered directly to the board as marked. Use the wires provided to solder the output jack to the board after mounting it to the case. “T” connects to the tip and “S” to the sleeve of the jack socket.

Hardware - Bottom

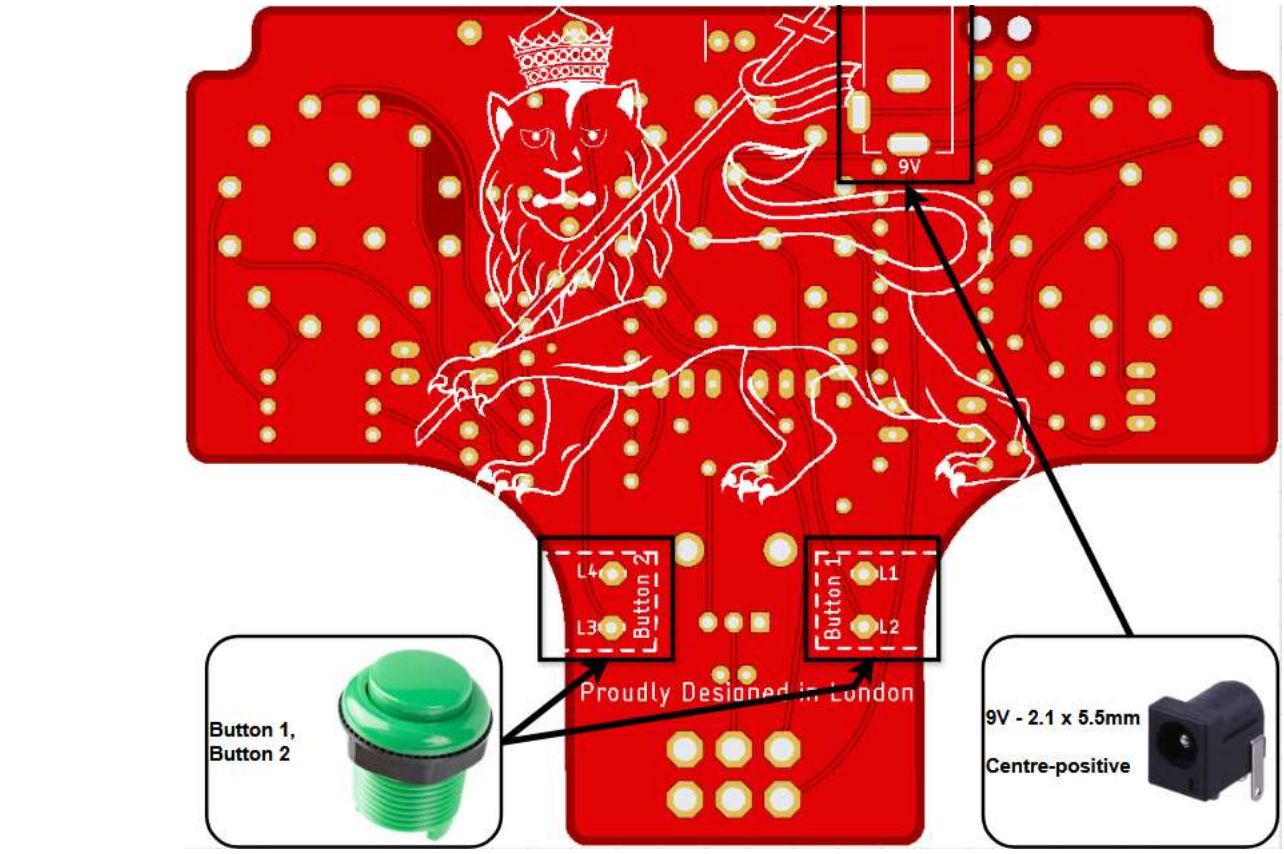

The 9V DC socket can also be mounted and soldered directly to the board. When the siren is powered via the DC socket, the battery is automatically disconnected. Drill the case and mount Button 1 and Button 2 to the case. Use the remaining wires to connect Button 1 (yellow) and Button 2 (green) to the board. Make sure to solder the button wires to the board only **AFTER** the buttons have been mounted to the case.

After soldering the components to the board, drill the case and mount the off-board components. If you are using a 1550C Hammond enclosure, use the drill template on the last page.

Operation

Before powering up the siren, make sure the volume control is all the way down (counter-clockwise). Power the siren using a PP3 9V battery or 9V DC (centre-positive) power supply and connect the output jack to a line input on a mixer, active speaker, etc. Use the toggle switch to turn the siren on and off. Use the three rotary switches to control the Pitch, Speed and Mode. Button 1 and button 2 do something sometimes so best to play about to learn and enjoy your new Dub Siren.

Pro Tip: Many users of the Dub Siren get the classic sounds by putting it through an echo effect.

We hope you enjoyed building the kit. If you have any questions or feedback, do not hesitate to get in touch via email (**kits@cricklewoodelectronics.com**) or call us on **020 8452 0161.**

Notes

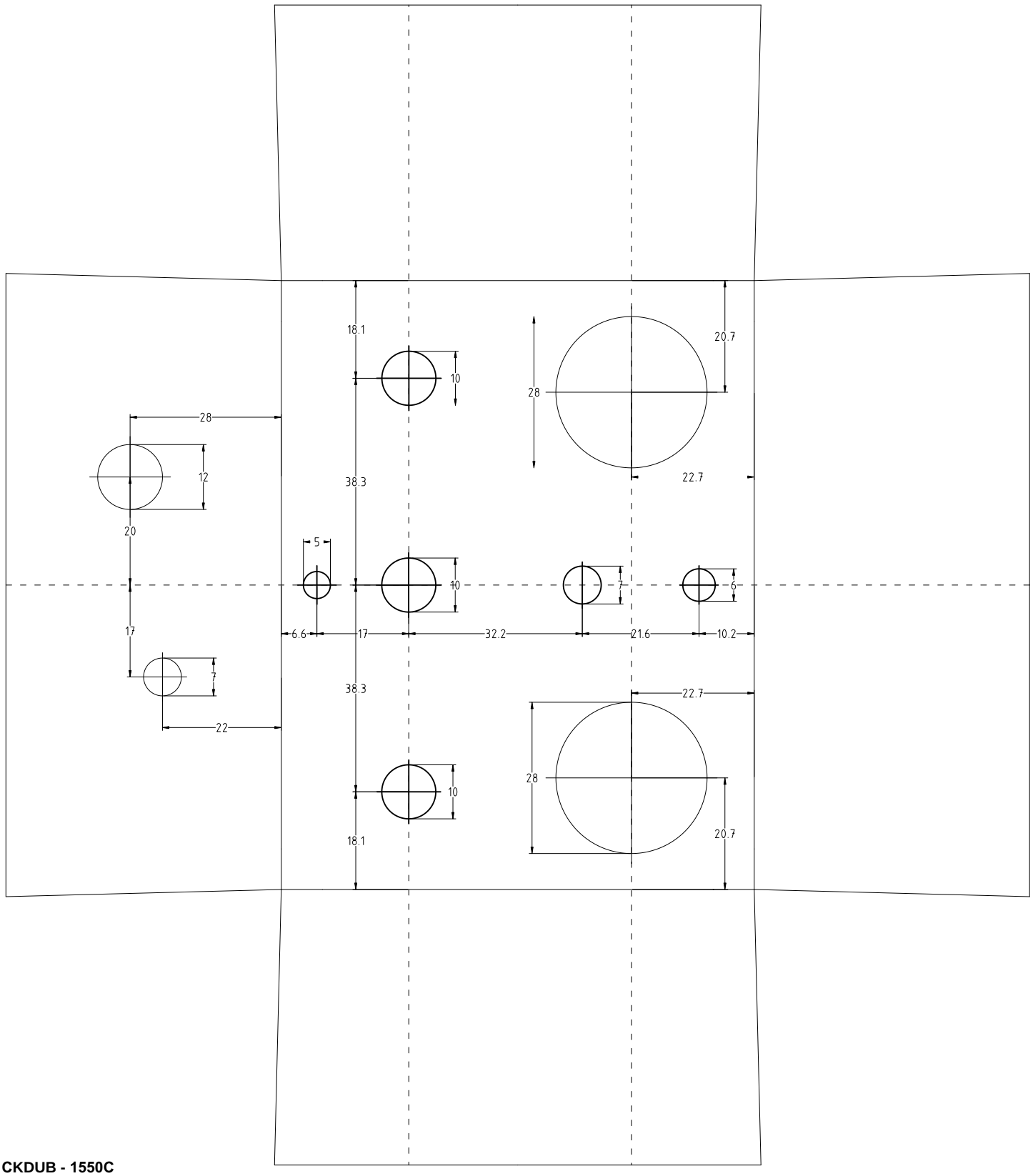

CKDUB - 1550C
V1.0

scale 1:1
(all units in mm)

0 mm 10 20 30 40 50 60 70 80 90 100